Silicone Wristband

ZD-12

GENERAL SPECIFICATIONS

Frequency	125KHz / 13.56MHz
Protocol	ISO11784/85, ISO 15693, ISO14443A
IC (optional)	LF: TK4100, EM4305, T5577, HF: MIFARE series, ICODE series, NTAG series,
Material	Silicone
Color	Orange, Red, Green, Blue, Yellow, etc.
Size	C 157MM C 184MM C 195MM C 228MM
Working Temperature	-25 ~ +70 ℃
Customized	Pre-encoded, Logo printing, UID printing Barcode/ QR code printing
Applications	Access control Contactless payment Gymnasium / Fitness center Worker ID

ZD Technology

Product Specification Sheet

Silicone Wristband
ZD-12

MECHANICAL DIMENSIONS

C 157MM
C 184MM
C 195MM
C 228MM

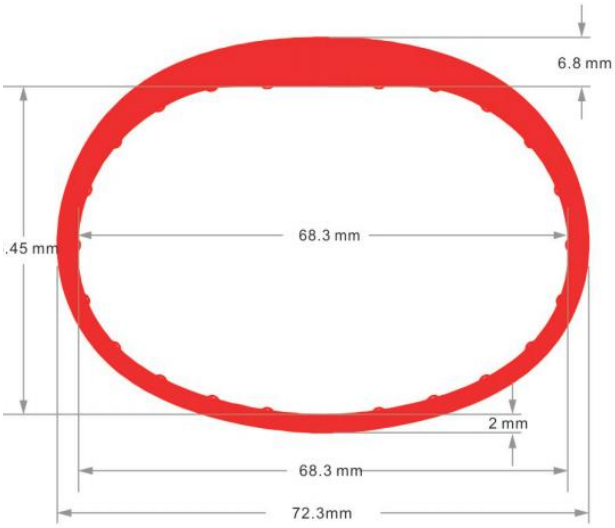

CRAFT FOR OPTIONAL

. Silk printing

. Barcode

. QR code

. Laser

. Laser ink filled

. Debossing

. Debossed ink filled

. Embossed

. Embossed ink filled